由 Autodesk 教育版产品制作

Customer No.:

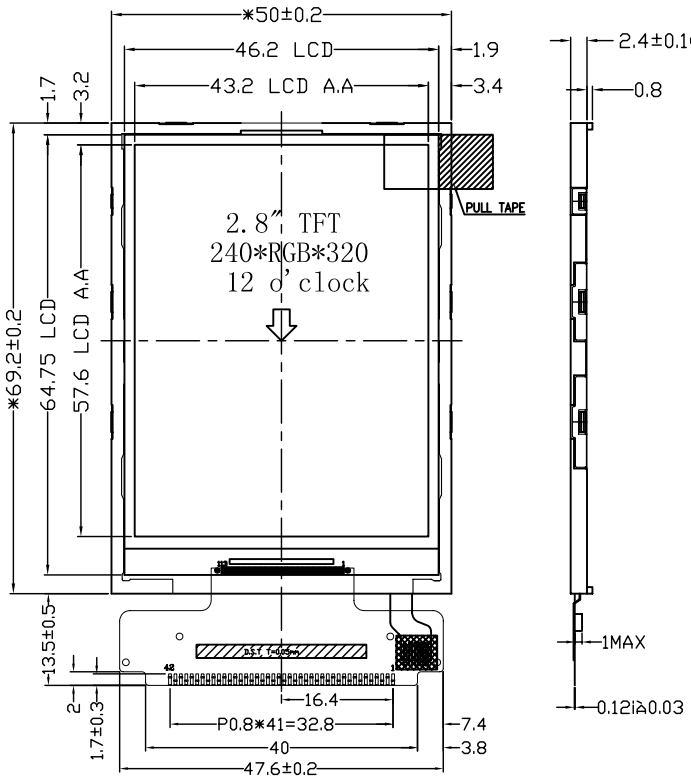

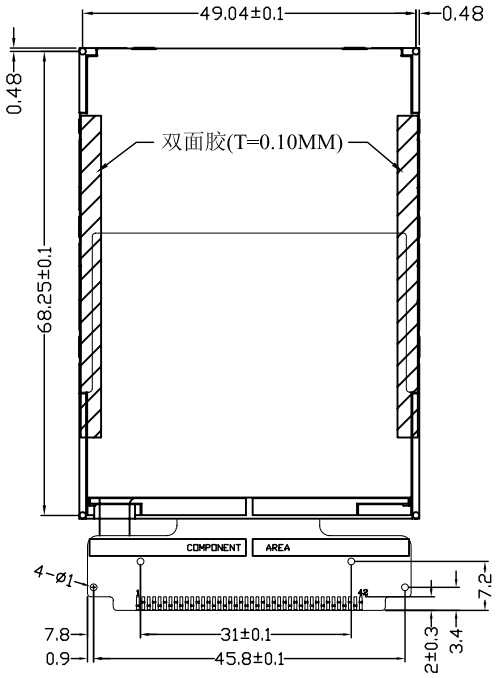

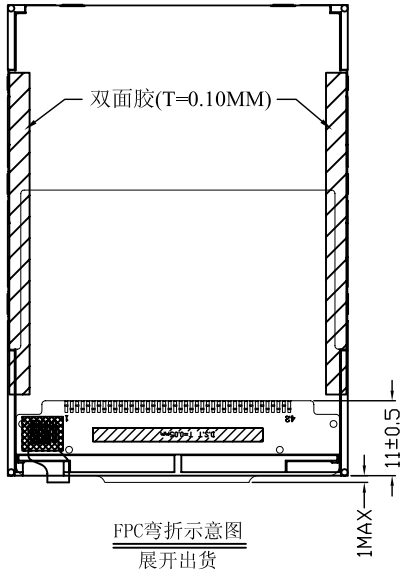

FPC弯折示意图
展开出货

接口定义:

1	GND
2	CABC_PWM_OUT
3	IM3
4	IM2
5	IM1
6	IM0
7	NRESET
8	VSYNC
9	HSYNC
10	DOTCLK
11	DE
12	DB17
13	DB16
14	DB15
15	DB14
16	DB13
17	DB12
18	DB11
19	DB10
20	DB9
21	DB8
22	DB7
23	DB6
24	DB5
25	DB4
26	DB3
27	DB2
28	DB1
29	DB0
30	SDA
31	NRD
32	WR (D/CX)
33	DNC (SCL)
34	NCS
35	IOVCC
36	VCI
37	GND
38	LED A
39	LED K1
40	LED K2
41	LED K3
42	LED K4

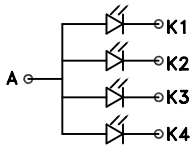

BACKLIGHT FPC CIRCUIT

NOTES:
1. DISPLAY TYPE: 262K COLOR TFT-LCD, TRANSMISSIVE
2. OPERATING TEMP: -20° C~60° C
3. STORAGE TEMP: -30° C~70° C
4. LCD DRIVER: ILI9341
5. BACKLIGHT: 4CHIP-WHITE LED
6. 符合ROHS要求

CUSTOMER APPROVE		AMEND			名称	深圳市信诚光电科技有限公司		
Mechanical	Electrical	NO.	CONTENT	DATE	TOLERANCE DECIMAL .x ± .30 .xx ± .20 ∠ ± 1/4°	PRODUCT NO. SINQ2842P001HC-N	DRAW NO.	REV A
		4	CONTENT4	DATE4		DWN qiushaoping	DSN	
		3	CONTENT3	DATE3		CHKD	APPD	
		2	CONTENT2	DATE2		NOT IN SCALE	UNIT mm	SHEET: 4-1
		1	CONTENT1	DATE1				

由 Autodesk 教育版产品制作